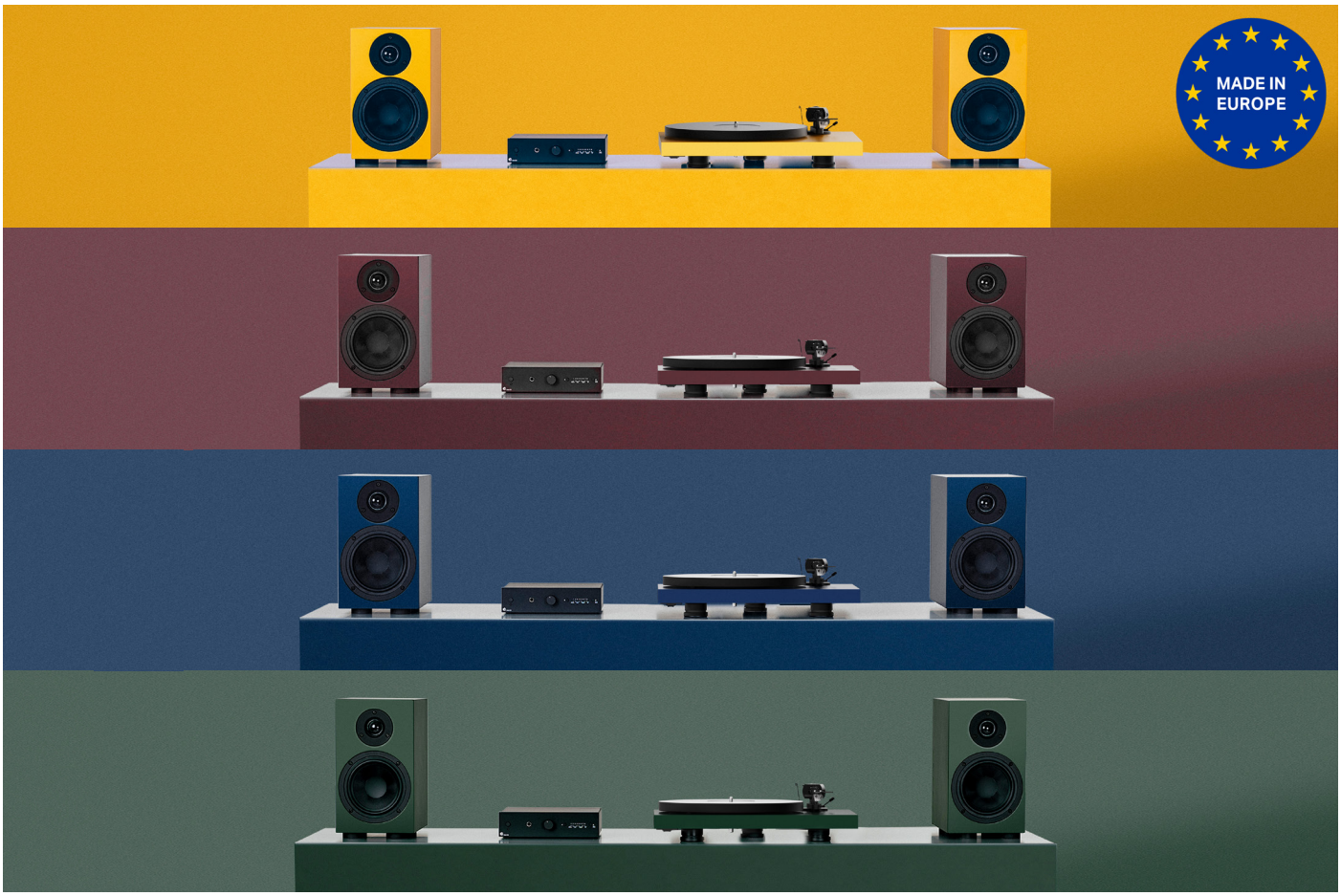

Colourful Audio System 2

All-In-One TRUE ANALOG HIFI STEREO SYSTEM

Real-wood veneer:

Satin:

- **NEW** including Debut EVO 2 turntable
- **NEW** satin signal orange & wine red finish
- True audiophile HiFi stereo system
- Analogue warm sound experience
- Connectivity to TV, CD player, etc.
- 8 different satin finishes
- High quality hand painted MDF
- Speaker grills included
- Dustcover included
- Handmade in Europe!

In the box:

- **Debut EVO 2**
  famous best buy turntable
- **Speaker Box 5 S2**
  2-way bass reflex monitor speaker
- **MaiA S3**
  HiFi amplifier incl. aptX™ HD streaming
- **Connect it LS E 3m**
  high quality solid core speaker cable
- **Damp it**
  special TPE damping feet

NO STEREO, NO HIFI

Standard all-in-one systems with speaker, amplifier, and streaming in one cabinet are **MONO.**

DIGITALLY ENHANCED

A small cabinet in plastic does not allow bass. The sound is enhanced by electronics like ketchup to the food.

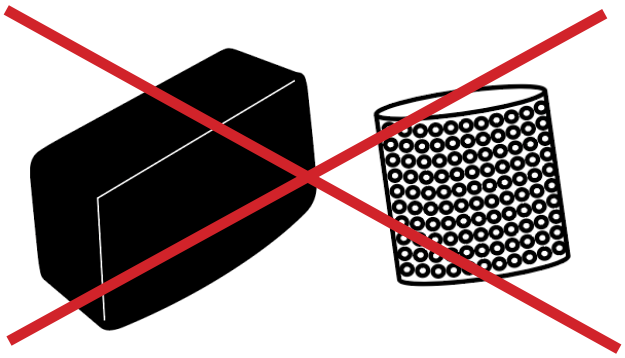

Typical „wireless“ streaming or BT speaker

IT IS OK FOR BACKGROUND MUSIC

But **NOT OK** when you want to enjoy music like a **Live-Concert!** For that you need the illusion of a sound stage and also a linear frequency response to hear the instruments like in nature!

For this you need a **STEREO HIFI SYSTEM** with **2 SPEAKERS**.

THE COLOURFUL AUDIO SYSTEM OFFERS IT ALL

- **TRUE** HiFi Stereo
- **ANALOG** warm sound experience
- **STREAMING** wireless high resolution Bluetooth
- **CONNECTIVITY** to TV, radio, CD player, etc.
- **TIMELESS DESIGN** in beautiful colours
- **25-YEARS** guaranteed spare part availability

NEW Colour: Signal Orange

Pick it MM EVO cartridge

High quality AC motor with suspension system

Heavy diecast & damped aluminium platter

DC/AC power generator for cleanest power

Premium Tonearm

The Debut EVO 2 turntable features a premium 8,6" carbon fiber tonearm with a massive aluminium bearing construction. The low friction tonearm bearing guarantees precise, stable and accurate tracking. Carbon gives the tonearm a high degree of rigidity while keeping the weight really low.

The one-piece arm and headshell design prevents unwanted resonances and offers a solid physical bond to the cartridge.

The new TPE damped counterweight reduces arm-cartridge resonances by as much as 50%.

This superb built tonearm delivers an insane sound quality with a convincing sound stage.

Correct adaptive anti-skating mechanism

As the skating force varies between the inner and outer grooves of the vinyl record, our anti-skating mechanism adjusts accordingly.

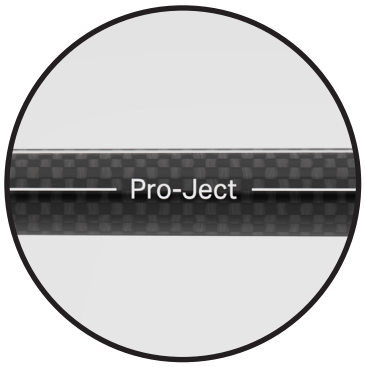

Carbon fiber tonearm tube

Super stiff and lightweight one-piece conical 8,6" carbon tonearm design.

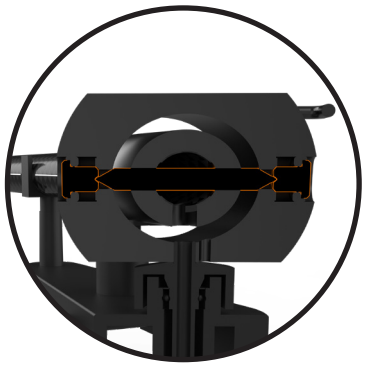

Massive low friction pin point bearing

The massive precise CNC milled alu tonearm bearing block absorbs all unwanted resonances coming from the cartridge.

Everything you need in one device

The MaiA (My Audio Integrated Amplifier) S3 is the all in one solution for your hifi system. Not only the circuit design was reworked, also the case has been significantly changed and the MaiA S3 uses our new S3 case. Due to the bigger size we were able to improve the circuit board layout in terms of electromagnetical interference. With its 8 inputs you are ready for any kind of source device.

It offers a phono RCA input for MM, MI or high output MC cartridges as well as three line RCA inputs for e.g. the CD Box S3. You can also connect digital sources like your TV or a CD transport via the coax or optical S/PDIF inputs and use the MaiA S3 DAC with a quality up to 24bit and 192kHz. If you want to stream your music from your mobile phone, tablet or pc you can simply connect to the high definition AptX HD capable Bluetooth 5.0 input with a sound quality up to 24-bit & 48kHz which is better than the standard CD quality.

The MaiA S3 also provides versatile output options. Use your favourite headphones to privately enjoy your favourite tracks or connect your speakers with the 4 mm banana plugs and the low noise amplifier will do the rest and provides you musical sound with lifelike characteristics. The variable RCA output also allows you to include a subwoofer or another power amplifier in your setup.

This new integrated amp offers you everything you need to connect your favourtite sources and enjoy music in an outstanding quality. With the supplied remote control you are able to analogue change the volume with the motor driven potentiometer and switch your input.

Speaker Box 5 S2

The Speaker Box 5 S2 is characterized by its spacious and detailed sound. A 25 mm silk dome tweeter delivers cristal clear highs, the 130 mm fiberglass cone gives full-bodied and lush mids as well as punchy and tight bass.

The Speaker Box 5 S2 is manufactured only with the highest quality materials and to 100% in Europe. Only high quality materials were used when Speaker Box 5 S2 was created. A very special, restistant and ecofriendly glue has been used to hold the cabinet together and to avoid any leakage.

Connect it LS E & Damp it

Connect it LS E is a high quality speaker cable, consisting of four 0,75mm² Solid Core conductors with circular array geometry. Each of the four conductors consists of high-purity oxygen free copper (HP-OFC).

Damp it are particularly suitable for bookshelf speakers & prevent the transmission of structure-borne sound from subsonics up to 500 Hz. The effect is similar to electronic subsonic filters, but without their sonic disadvantages.

Debut EVO 2

- 8,6" one-piece conical carbon tonearm
- Motor suspension with better damping
- Height adjustable metal feet
- 1,7kg aluminium platter with TPE damping
- Electronic speed control and speed switching

Damp it

- Special rubber feet
- Optimal isolation of the speaker from the turntable
- When turntable & speaker are on the same level

Connect it LS E

- 2x 3m high grade speaker cable
- Golden plated banana connectors
- Solid core technology
- High purity oxygen-free copper (HP-OFC)
- Circular array geometry

MaiA S3

- Micro HiFi amplifier
- Headphone amplifier
- 8 inputs (5x analog, 3x digital & 1x wirless BT)
- Phono MM, MI + high output MC input
- Analogue volume control - motor driven potentiometer
- Cirrus Logic CS4344 24bit/192kHz
- S/PDIF inputs support up to 24bit and 192kHz
- Bluetooth 5.0 - aptX HD (24-bit, up to 48kHz)
- Variable output for subwoofer or second zone amp
- Premium aluminium casework

Speaker Box 5 S2

- Acoustically transparent speaker grill included
- Audiophile bass-reflex design
- Sophisticated internal bracing
- Ultra stiff non resonating MDF cabinet
- Audiophile direct-wired crossover - no PCB!
- Lead free solder
- Ecofriendly glue from Kleiberit

ALL HANDMADE IN EUROPE!

MADE IN EUROPE

Debut EVO 2:

Speed: 33, 45 (electronic speed change)
Drive principle: belt drive, electronic speed control
Platter: 300mm, die cast aluminium platter
Platter bearing: stainless steel axle in bronze bushing
Wow & flutter: 33: +/-0,16%; 45: +/-0,14%
Speed drift: 33: +/-0,40%; 45: +/-0,50%
Signal to noise: 68dB
Tonearm: 8,6" one-piece carbon tonearm
Effective arm length/mass: 218,5 mm / 10,0 g
Overhang: 18,5mm
Included accessories: 15V DC / 0,8A power supply, dust cover, 7" single adapter
Power consumption: 4W / 0W standby
Dimensions: 415 x 113 x 320mm (WxHxD)
Dustcover open: 415 x 365 x 405mm (WxHxD)
Weight: 6 kg net

MaiA S3:

Power output: 2x 40W at 4ohms (1% THD)
Frequency response (20Hz-20kHz): <-0,5dB @4ohm
Channel separation: - 69dB at 10kHz
Headphone amplifier: 2x 75mW at 32ohm (1%THD)
Analogue inputs: 3x pair RCA, 1x phono MM (RCA)
Digital inputs: RCA coax, 2 x Toslink, Bluetooth 5.0
Power amplifier: Texas Instruments TPA3221DDV
Standby power consumption: < 0,5W
Included accessories: Remote control, power supply
Dimensions WxHxD: 206x55x153
Weight: 1070 g without power supply

Speaker Box 5 S2:

Nominal impedance: 8 Ohm
Recommended amplifier power: 10 to 150 Watts
Tweeter: 25 mm Ø silk-dome, Neodynium magnet
Woofer: 130 mm Ø fiberglass cone
Dimensions: 160 x 271 x 215mm (WxHxD)
Frequency response: 55 Hz - 20 kHz
Included accessories: Speaker grills (black)
Weight: 4,9 kg